siteco

Order No.: 5LZ980200ACK | **GTIN (EAN):** 4069025765628

Product description: SConWi,surf-mount-hous,surf,plast,wh



SITECO Connect Wireless, surface-mounted housing, installation type: surface-mounted, control gear: Casambi, housing, housing, of plastic, white, diameter: 110mm, height: 45mm, surface-mounted housing, local control - self-sufficient standalone sensors, certification: CE, UKCA, permissible operating ambient temperature: -5..+45°C, packaging unit: 1 piece

CE

Wt. (kg):	0.1
GTIN (EAN):	4069025765628

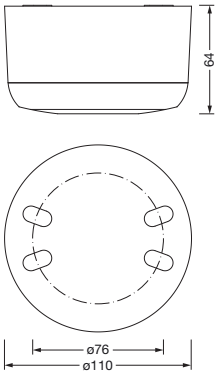

It is mandatory that the assembly instructions must be observed when planning and installing the electrical installation (to be found at www.siteco.de)
Tolerances related to thermal, electrical and photometric data according to IEC 62722
Issued 17.08.2026 - Modifications and errors subject to change - Ensure that you always use the latest version -

Siteco GmbH • Georg-Simon-Ohm-Str. 50 • 83301 Traunreut, Germany • Tel +49(8669)33-0 • Fax +49(8669)33-397 • eMail info@siteco.de • Internet www.siteco.com

Order No.: 5LZ980200ACK | **GTIN (EAN):** 4069025765628

Detailed technical description: SConWi,surf-mount-hous,surf,plast,wh



Key data
- System family: SITECO Connect Wireless
- Product type: surface-mounted housing
- Product name: SITECO Connect Wireless
- Order No.: 5LZ980200ACK

Lighting technology | Lamps | Control gear

Component 1

Operating device:
- Control: Casambi

Certificates, Standards
- Temperature range (operation): -5..+45°C
- Certification, designation: CE, UKCA

Material, Colour
- housing: plastic, white
- housing: plastic, white

Mounting
- Mounting method, mounting location: surface-mounted, to the ceiling
- Supplement: only suitable for use in indoor areas

Dimensions, Weight
- Diameter: 110mm
- Height: 45mm
- Weight: 0.1kg

It is mandatory that the assembly instructions must be observed when planning and installing the electrical installation (to be found at www.siteco.de)
Tolerances related to thermal, electrical and photometric data according to IEC 62722
Issued 17.08.2026 - Modifications and errors subject to change - Ensure that you always use the latest version -

Siteco GmbH • Georg-Simon-Ohm-Str. 50 • 83301 Traunreut, Germany • Tel +49(8669)33-0 • Fax +49(8669)33-397 • eMail info@siteco.de • Internet www.siteco.com

siteco

Order No.: 5LZ980200ACK | **GTIN (EAN):** 4069025765628

Dimensions: SConWi,surf-mount-hous,surf,plast,wh

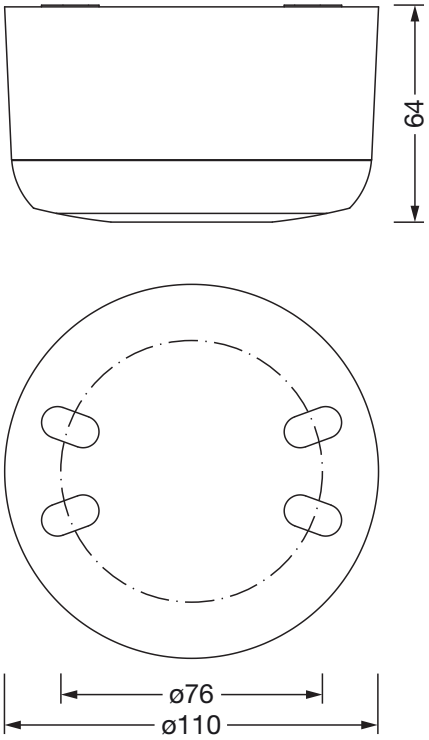

It is mandatory that the assembly instructions must be observed when planning and installing the electrical installation (to be found at www.siteco.de)
Tolerances related to thermal, electrical and photometric data according to IEC 62722
Issued 17.08.2026 - Modifications and errors subject to change - Ensure that you always use the latest version -

Siteco GmbH • Georg-Simon-Ohm-Str. 50 • 83301 Traunreut, Germany • Tel +49(8669)33-0 • Fax +49(8669)33-397 • eMail info@siteco.de • Internet www.siteco.com